STL - CC1620

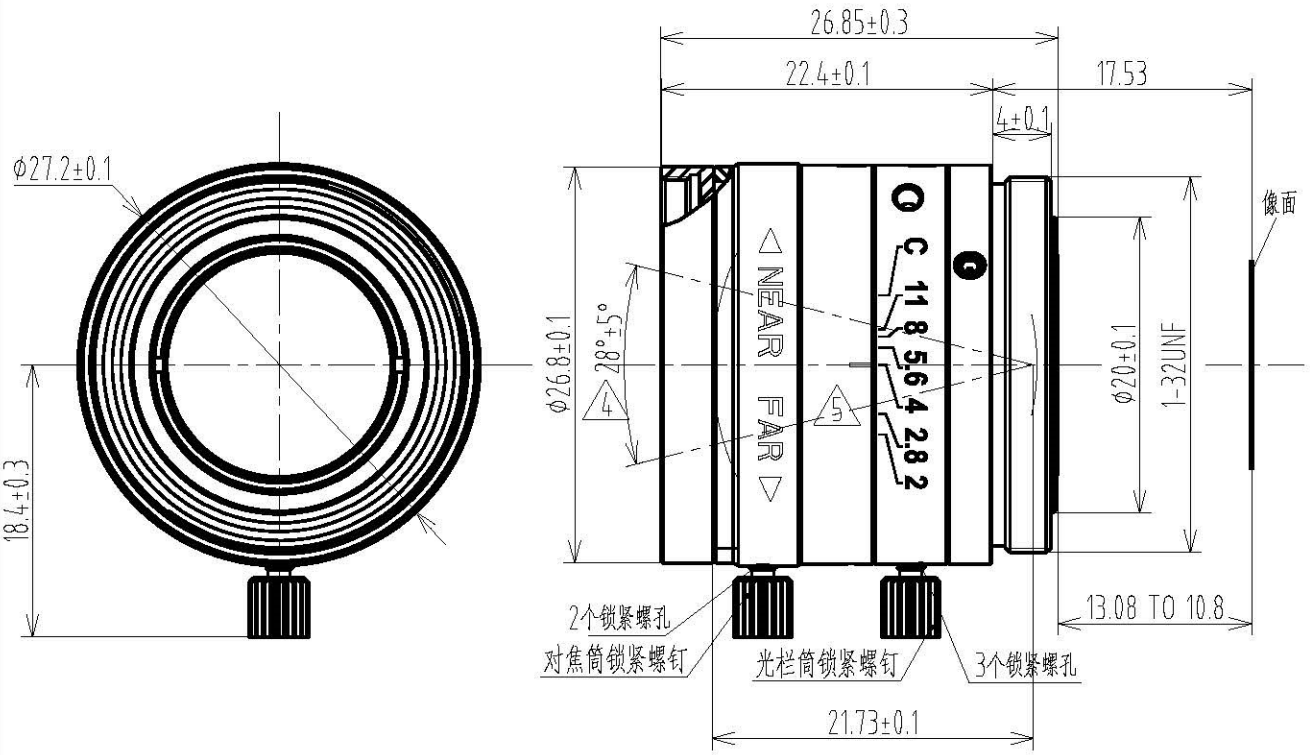


| 1/1.8" F2.0 C Mount | | | | | Working distance | Optical Magnification | 1/1.8" Field of View(mm) | |
|---|---|---|---|---|---|---|---|---|
| Focal Length | | f=16mm | | | mm | | H | V |
| F/NO | | F=2.0-C | | | 900 | 0.018X | 400 | 295.5 |
| Image Size | | 1/1.8"(7.2×5.32mm) | 1/2.5"(5.76×4.32mm) | 1/3"(4.8×3.6mm) | 850 | 0.019X | 379 | 280 |
| Angle FOV | H | 24.7° | 20.6° | 17.4° | 800 | 0.020X | 360 | 266 |
| | V | 18.2° | 15.8° | 13.5° | 750 | 0.021X | 342.9 | 253.3 |
| | D | 30.3° | 25.2° | 21.3° | 700 | 0.023X | 313 | 231.3 |
| Object Dimension at WD.300mm | H | 133.3mm | 106.7mm | 88.9mm | 650 | 0.025X | 288 | 212.8 |
| | V | 98.5mm | 6 80mm | 66.7mm | 600 | 0.027X | 266.7 | 197 |
| | D | 165.8mm | 133.3mm | 111.1mm | 550 | 0.029X | 248.3 | 183.5 |
| Distortion (TV) | | <0.1% | | | 500 | 0.032X | 225 | 166.3 |
| Focus distance(min) | | 0.1m | | | 450 | 0.036X | 200 | 147.8 |
| Flange back | | 17.526mm in air | | | 400 | 0.040X | 180 | 133 |
| Back focus | | 12.7mm in air | | | 350 | 0.046X | 156.5 | 115.6 |
| Filter screw size | | M25.5×P0.5 | | | 300 | 0.054X | 133.3 6 | 98.5 |
| Front/Rear Effective Dia | | Front Φ15.2mm Rear Φ6mm | | | 250 | 0.064X | 112.5 | 83.1 |
| Mount | | C-Mount | | | 200 | 0.080X | 90 | 66.5 |
| Temperature Range | | -10~+50°C | | | 150 | 0.107X | 67.3 | 49.7 |
| Storage Temperature Range | | -20~+60°C | | | 100 | 0.162X | 44.4 | 32.8 |

TOLERANCE:
. LINEARITY TOLERANCES ±0.05
. ANGULAR TOLERANCES ARE±30'
. DRAFT ANGLES AREA±0.5°/SIDE

三角法

材料(环保): ---

| 单位 | 比例 |
|---|---|
| mm | 2:1 |

| 标记 | 处数 | 更改文件号 | 担当 | 变更日期 | | | | |
|---|---|---|---|---|---|---|---|---|
| 6 | 2 | | CHP | 2021,08,16 | 设计 | | | 名称 |
| | | | | | 校对 | | | |
| | | | | | 审核 | | | 代号 |
| | | | | | 批准 | | | |

名称: BTCH-FA1601C-5M

页码: 1/1

版本: V6

A4